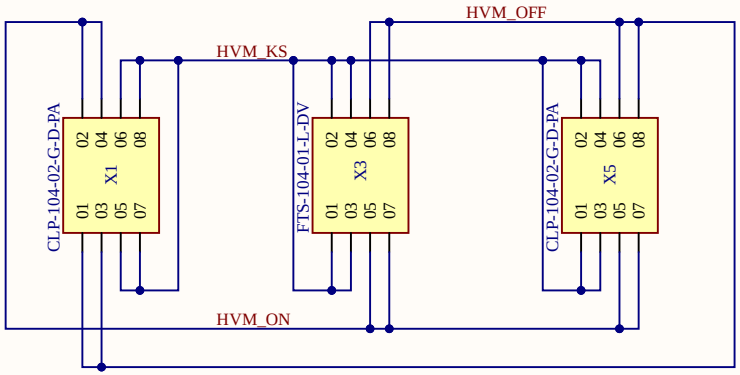

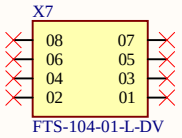

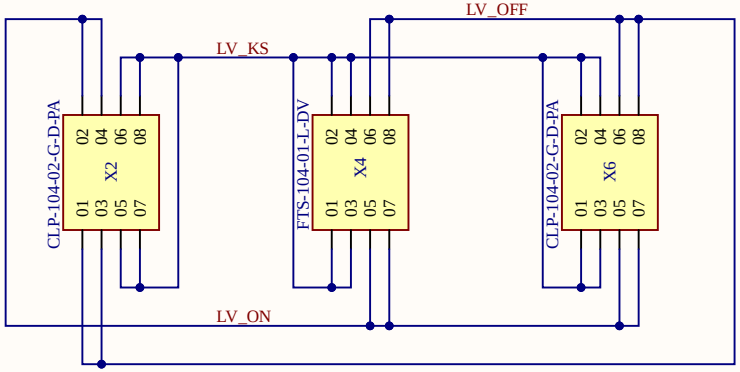

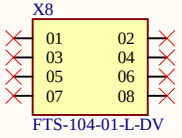

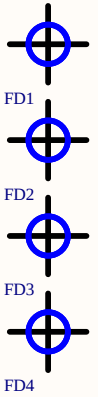

1 2 3 4

NEXPERIA

Project		nexperia
Title Adapterboard for Paralleling		
Author Zhe Yu		
ReviewedBy		
Date 04.2025	**Revision** V 2.0	**Sheet** 1 **of** 1